1000 GALLON (H-10) MONO TANK

SEPTI TECH

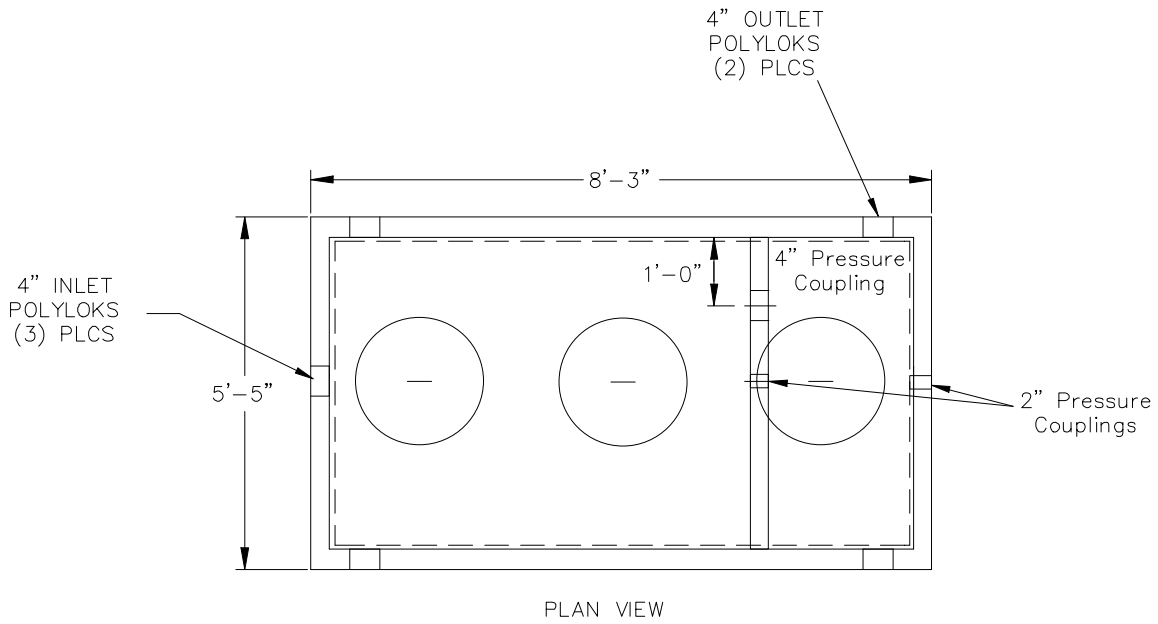

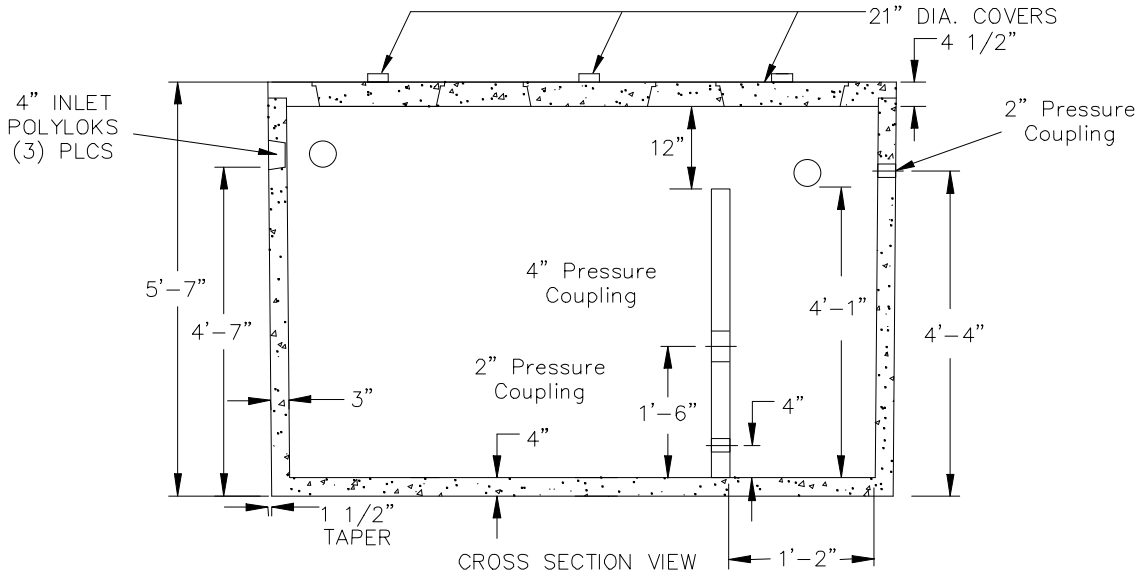

SPECIFICATIONS

- Concrete Minimum Strength: 4,000 P.S.I @ 28 days
- Steel Reinforcement: AS-615-68, Grade 60
- Design Loading: AASHTO - H-10
- Meets ASTM Spec. C1227
- Weight: 9,200 lbs.